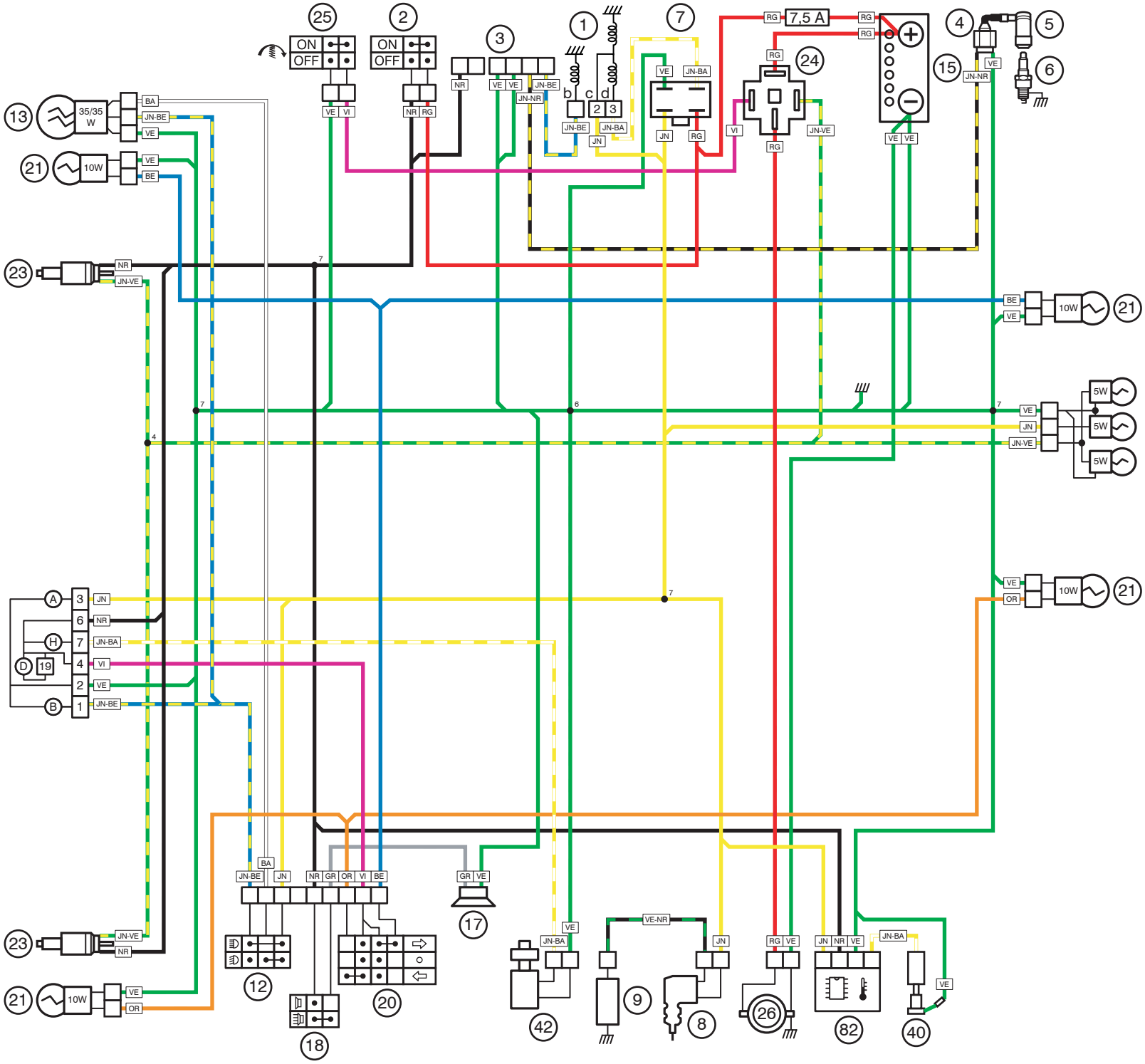

LUDIX PRO AP 4T